circuit diagram:

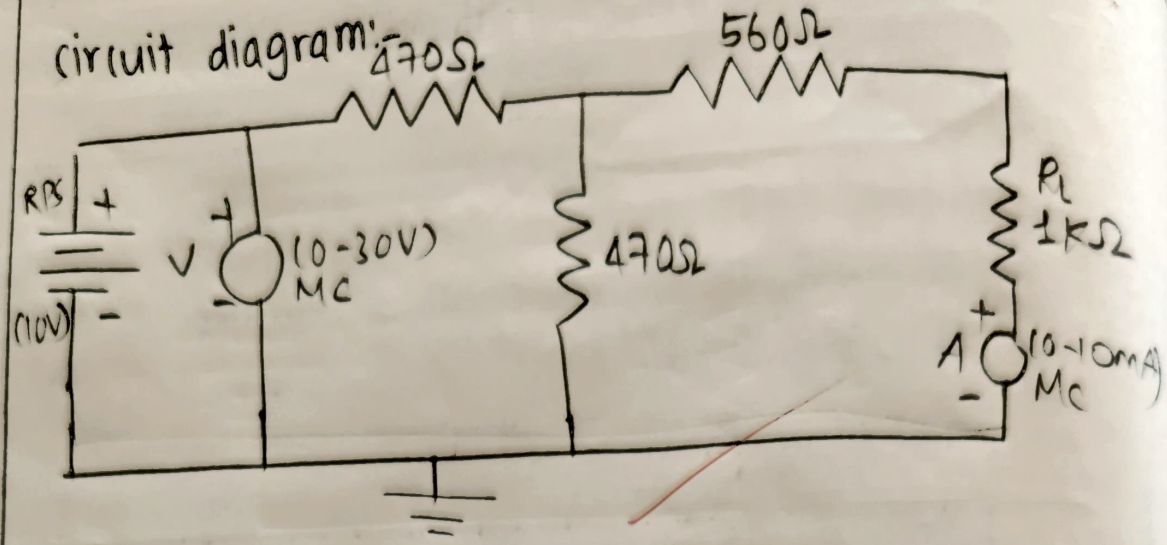

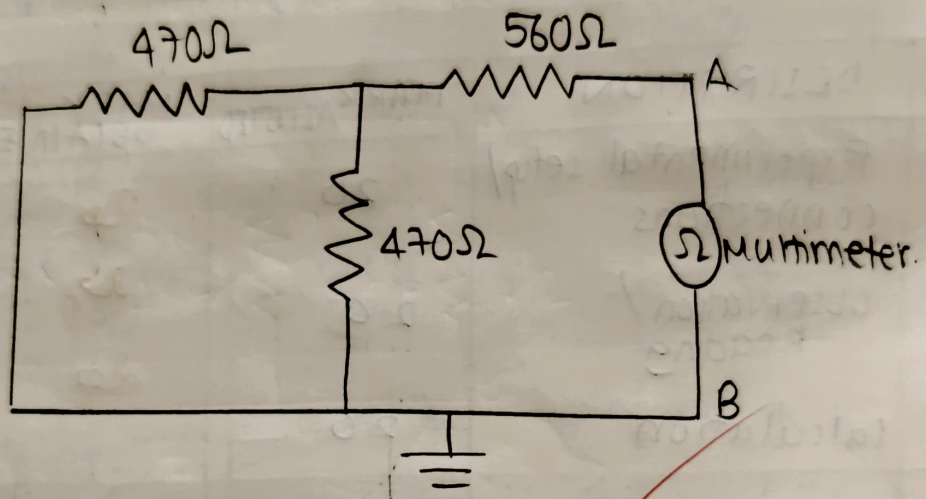

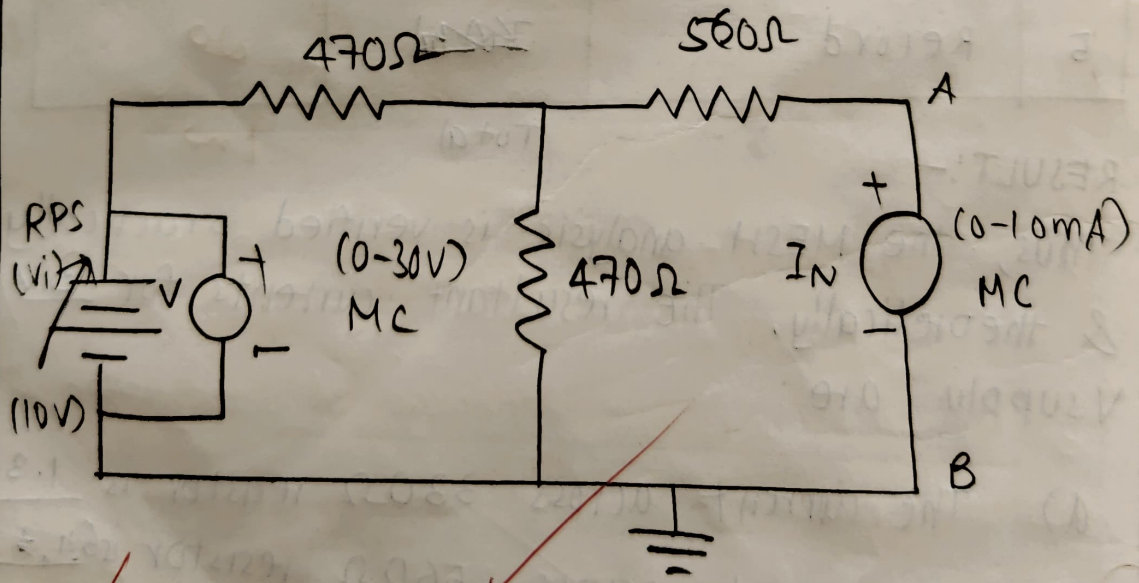

Thevenin's equivalent circuit

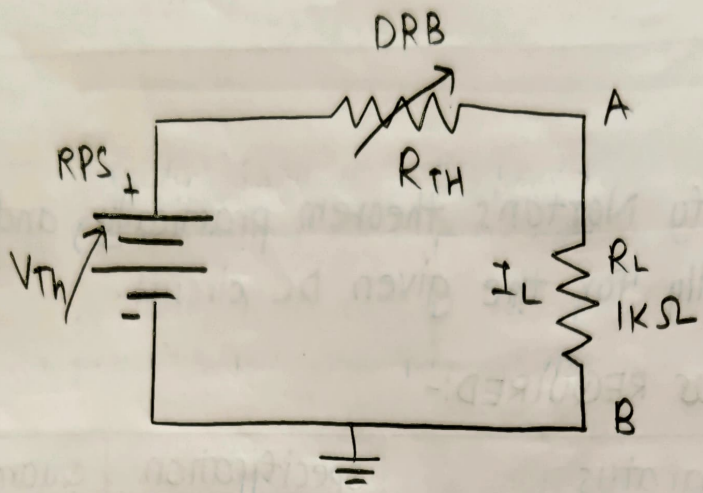

Norton's equivalent circuit:-

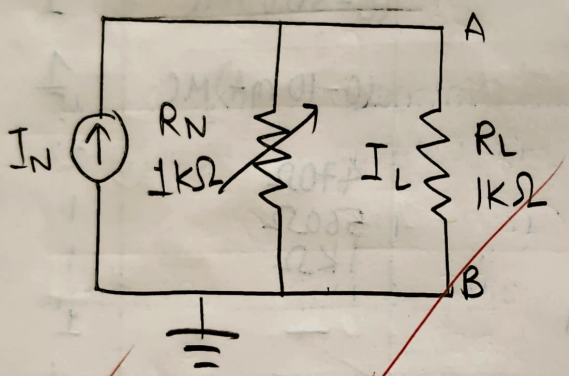

To measure I_L :-

Vi (volts)	I_L (amps
2	0.35
4	0.71
6	1.07
8	1.43
10	1.73

To measure R_{Th} or R_N :-

Vi (volts)	R_{Th} (Ω)
2	790
4	798
6	803
8	796
10	800

To measure I_N or I_{SC}

Vi (volts)	I_N (amps)
2	0.80
4	1.62
6	2.45
8	3.25
10	4.05

11/2/26
O/P verified

Model calculation:-

Given:- $V_i = 10V$

$R_1 = 470\Omega$, $R_2 = 470\Omega$

$R_3 = 560\Omega$.

V_{Th}:- Parallel resistors

$R_p = 470 \| 470 = 235\Omega$

$V_{Th} = 10 \times \frac{235}{705} = 3.33V$

R_{Th}:- $R_{Th} = 560 + 235$

$= 795\Omega$

I_N:- $I_N = \frac{V_{Th}}{R_{Th}} = \frac{3.33}{795} = 4.19mA$

I_L:- $I_L = \frac{V_{Th}}{R_{Th} + R_L} = \frac{3.33}{1795} = 1.85mA$.

NO